International Journal of Advanced Computer Research (ISSN (print): 2249-7277 ISSN (online): 2277-7970)
Volume-3 Number-4 Issue-13 December-2013

General Fault Admittance Method Solution of a Line-to-Line Fault

J.D. Sakala[1], J.S.J. Daka[2]

Abstract

In the classical approach, line-to-line faults are usually analysed using a parallel connection of symmetrical component sequence networks. The sequence networks are solved separately, and then the positive and negative sequence networks are connected in parallel for a line-to-line fault, and solved to obtain the phase quantities. The solution proceeds by identifying the connection of the sequence networks at the fault point and then solving for the symmetrical component currents and voltages. These are then used to determine the symmetrical component voltages at the other busbars and hence the symmetrical component currents in the lines. The approach requires that the connection of the sequence networks be known for the common fault types. However, a solution by the general method of fault admittance matrix does not require prior knowledge of how the sequence networks are connected. This makes the general method more versatile than the classical methods. The paper presents a procedure for simulating a short circuit, which is a requirement for using the general fault admittance method. A simple power system containing a delta earthed star transformer is analysed for a line-to-line fault. The results obtained are as accurate as those obtained using the classical approaches.

Keywords

Unbalanced faults analysis, Line-to-line fault, Fault admittance matrix, Delta earthed-star transformer.

1. Introduction

The paper presents a method for solving the line-to-line fault using the general fault admittance method. The general fault admittance method differs from the classical approaches based on symmetrical components in that it does not require prior knowledge of how the sequence components of currents and voltages are related [1-4].

J.D. Sakala, Department of Electrical Engineering, University of Botswana, Gaborone, Botswana.
J.S.J. Daka, Department of Electrical Engineering, University of Botswana, Gaborone, Botswana.

In the classical approach, knowledge of how the sequence components are related is required because the sequence networks have to be connected in a prescribed way for a particular fault. Then the sequence currents and voltages at the fault are determined, after which symmetrical component currents and voltages in the rest of the network are calculated. Phase currents and voltages are found by transforming the respective symmetrical component values [4-9].

A line-to-line fault presents low value impedance, with zero value for a direct short circuit or metallic fault, between the two phases at the point of fault in the network. In general, a fault may be represented as in shown Figure 1.

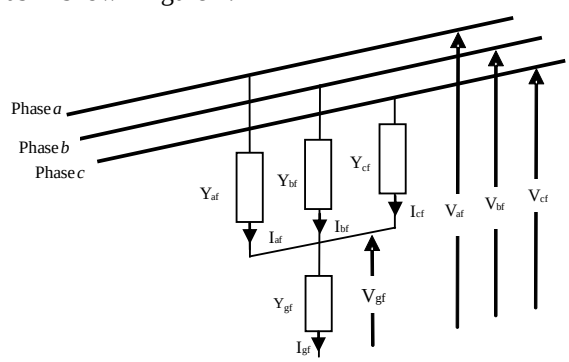

Figure 1: General Fault Representation

2. Background

A line-to-line fault presents a low value impedance, with zero value for a direct short circuit or metallic fault, between two the phases at the point of fault in the network. In general, a fault may be represented as in shown Figure 1. In Figure 1, a fault at a busbar is represented by fault admittances in each phase, i.e. the inverse of the fault impedance in the phase, and the admittance in the ground path. Note that the fault admittance for a short-circuited phase is represented by an infinite value, while that for an open-circuited phase is a zero value. Thus for a line-to-line fault the admittances Y_{af} and Y_{gf} are zero while Y_{bf} and Y_{cf} are infinite. A systematic approach for using a fault admittance matrix in the general fault admittance method is given by Sakala and Daka [1-3]. A brief

summary of the method is given in this paper to give the reader a view of the methodology.

The general fault admittance matrix is given by

$$Y_f = \left(\frac{1}{Y_{af} + Y_{bf} + Y_{cf} + Y_{gf}} \right)$$

$$\times \begin{bmatrix} Y_{af}\left(Y_{bf} + Y_{cf} + Y_{gf}\right) & -Y_{af}Y_{bf} & -Y_{af}Y_{cf} \\ -Y_{af}Y_{bf} & Y_{bf}\left(Y_{af} + Y_{cf} + Y_{gf}\right) & -Y_{bf}Y_{cf} \\ -Y_{af}Y_{cf} & -Y_{bf}Y_{cf} & Y_{cf}\left(Y_{af} + Y_{bf} + Y_{gf}\right) \end{bmatrix} \quad (1)$$

Equation (1) is transformed using the symmetrical component transformation matrix be T, and its inverse be T^{-1}, where

$$T = \begin{bmatrix} 1 & 1 & 1 \\ \alpha^2 & \alpha & 1 \\ \alpha & \alpha^2 & 1 \end{bmatrix} \quad \text{and} \quad T^{-1} = \frac{1}{3}\begin{bmatrix} 1 & \alpha & \alpha^2 \\ 1 & \alpha^2 & \alpha \\ 1 & 1 & 1 \end{bmatrix},$$

in which $\alpha = 1\angle 120^\circ$ is a complex operator.

The symmetrical component fault admittance matrix is given by the product

$$Y_{fs} = T^{-1} Y_f T$$

The general expression [1-4] for Y_{fs} is given by

$$Y_{fs} = \frac{1}{Y_{af} + Y_{bf} + Y_{cf} + Y_{gf}} \begin{bmatrix} Y_{fs11} & Y_{fs12} & Y_{fs13} \\ Y_{fs21} & Y_{fs22} & Y_{fs23} \\ Y_{fs31} & Y_{fs32} & Y_{fs33} \end{bmatrix} \quad (2)$$

Where

$$Y_{fs11} = Y_{fs22} = \frac{1}{3} Y_{gf}\left(Y_{af} + Y_{bf} + Y_{cf}\right) + Y_{af}Y_{bf} + Y_{af}Y_{cf} + Y_{bf}Y_{cf}$$

$$Y_{fs33} = \frac{1}{3} Y_{gf}\left(Y_{af} + Y_{bf} + Y_{cf}\right)$$

$$Y_{fs12} = \frac{1}{3} Y_{gf}\left(Y_{af} + \alpha^2 Y_{bf} + \alpha Y_{cf}\right) - \left(Y_{bf}Y_{cf} + \alpha Y_{af}Y_{bf} + \alpha^2 Y_{af}Y_{cf}\right)$$

$$Y_{fs21} = \frac{1}{3} Y_{gf}\left(Y_{af} + \alpha Y_{bf} + \alpha^2 Y_{cf}\right) - \left(Y_{bf}Y_{cf} + \alpha^2 Y_{af}Y_{bf} + \alpha Y_{af}Y_{cf}\right)$$

$$Y_{fs13} = Y_{fs32} = \frac{1}{3} Y_{gf}\left(Y_{af} + \alpha Y_{bf} + \alpha^2 Y_{cf}\right) \quad \text{and}$$

$$Y_{fs31} = Y_{fs23} = \frac{1}{3} Y_{gf}\left(Y_{af} + \alpha^2 Y_{bf} + \alpha Y_{cf}\right)$$

The expressions do simplify considerably depending on the type of fault. For a line-to-line fault:
$Y_{af} = Y_{gf} = 0$, $Y_{bf} = Y_{cf} = 2Y$, i.e. $Z_{af} = Z_{gf} = \infty$

$$Y_{fs} = \frac{1}{2Y + 2Y} \begin{bmatrix} 2Y \times 2Y & -\left(2Y \times 2Y\right) & 0 \\ -\left(2Y \times 2Y\right) & 2Y \times 2Y & 0 \\ 0 & 0 & 0 \end{bmatrix}$$

$$= Y \begin{bmatrix} 1 & -1 & 0 \\ -1 & 1 & 0 \\ 0 & 0 & 0 \end{bmatrix} \quad (3)$$

2.1 Currents in the Fault

At the faulted busbar, say busbar j, the symmetrical component currents in the fault are given by

$$I_{fsj} = Y_{fs}\left(U + Z_{sjj} Y_{fs}\right)^{-1} V_{sj}^{\ 0} \quad (4)$$

where U is the unit matrix

$$U = \begin{bmatrix} 1 & 0 & 0 \\ 0 & 1 & 0 \\ 0 & 0 & 1 \end{bmatrix}$$

and Z_{sjj} is the jj^{th} component of the symmetrical component bus impedance matrix

$$Z_{sjj} = \begin{bmatrix} Z_{sjj+} & 0 & 0 \\ 0 & Z_{sjj-} & 0 \\ 0 & 0 & Z_{sjj0} \end{bmatrix}$$

The element Z_{sjj+} is the Thevenin's positive sequence impedance at the faulted busbar, Z_{sjj-} is the Thevenin's negative sequence impedance at the faulted busbar, and Z_{sjj0} is the Thevenin's zero sequence impedance at the faulted busbar.
Note that as the network is balanced the mutual terms are all zero.

In (4), $V_{sj}^{\ 0}$ is the prefault symmetrical component voltage at busbar j the faulted busbar

$$V_{sj}^{\ 0} = \begin{bmatrix} V_{sj+} \\ V_{sj-} \\ V_{sj0} \end{bmatrix} = \begin{bmatrix} V_+ \\ 0 \\ 0 \end{bmatrix}$$

where V_+ is the positive sequence voltage before the fault. The negative and zero sequence voltages are zero because the system is balanced prior to the fault.

The phase currents in the fault are then obtained by transformation

$$I_{fpj} = \begin{bmatrix} I_{afj} \\ I_{bfj} \\ I_{cfj} \end{bmatrix} = TI_{fsj} \tag{5}$$

2.2 Voltages at the Busbars

The symmetrical component voltage at the faulted busbar *j* is given by

$$V_{fsj} = \begin{bmatrix} V_{j+} \\ V_{j-} \\ V_{j0} \end{bmatrix} = \left(U + Z_{sjj}Y_{fs}\right)^{-1} V_{sj}^{\ 0} \tag{6}$$

The symmetrical component voltage at a busbar *i* for a fault at busbar *j* is given by:

$$V_{fsi} = \begin{bmatrix} V_{i+} \\ V_{i-} \\ V_{i0} \end{bmatrix} = V_{si}^{\ 0} - Z_{sij}Y_{fs}\left(U + Z_{sjj}Y_{fs}\right)^{-1} V_{sj}^{\ 0} \tag{7}$$

where

$$V_{si}^{\ 0} = \begin{bmatrix} V_{i+}^{\ 0} \\ 0 \\ 0 \end{bmatrix}$$

gives the symmetrical component prefault voltages at busbar *i*. The negative and zero sequence prefault voltages are zero.

In (7), Z_{sij} gives the ij^{th} components of the symmetrical component bus impedance matrix, the mutual terms for row *i* and column *j* (corresponding to busbars *i* and *j*)

$$Z_{sij} = \begin{bmatrix} Z_{sij+} & 0 & 0 \\ 0 & Z_{sij-} & 0 \\ 0 & 0 & Z_{sij0} \end{bmatrix}$$

The phase voltages in the fault, at busbar *j*, and at busbar *i* are then obtained by transformation

$$V_{fpj} = \begin{bmatrix} V_{afi} \\ V_{bfi} \\ V_{cfi} \end{bmatrix} = TV_{fsj} \quad \text{and} \quad V_{fpi} = \begin{bmatrix} V_{afpi} \\ V_{bfpi} \\ V_{cfpi} \end{bmatrix} = TV_{fpi} \tag{8}$$

2.3 Currents in Lines, Transformers and Generators.

The symmetrical component currents in a line between busbars *i* and *j* is given by

$$I_{fsij} = Y_{fsij}\left(V_{fsi} - V_{fsj}\right) \tag{9}$$

where

$$Y_{fsij} = \begin{bmatrix} Y_{fsij+} & 0 & 0 \\ 0 & Y_{fsij-} & 0 \\ 0 & 0 & Y_{fsij0} \end{bmatrix}$$

is the symmetrical component admittance of the branch between busbars *i* and *j*. Equation (9) also applies to transformers, when there is no phase shift between the terminal quantities or when the phase shift is catered for when assembling the phase quantities. In the latter case, the positive sequence values are phase shifted forward and the negative sequence values are phase shifted backwards by the phase shift (usually $\pm 30^\circ$). The line currents on the delta-connected side of a delta star transformer should have the appropriate phase to line conversion factor. Equation (9) also applies to a generator where the source voltage will be the prefault induced voltage and the receiving end busbar voltage is the postfault voltages at the busbar. The phase currents in the branch are found by transformation

$$I_{fpij} = \begin{bmatrix} I_{aifj} \\ I_{bifj} \\ I_{cfij} \end{bmatrix} = TI_{fsij} \tag{10}$$

3. Line-to-Line Fault Simulation

Equation (3) gives the symmetrical component fault admittance matrix for a line-to-line fault. It is restated here for easy of reference:

$$Y_{fs} = \frac{1}{2Y + 2Y}\begin{bmatrix} 2Y \times 2Y & -\left(2Y \times 2Y\right) & 0 \\ -\left(2Y \times 2Y\right) & 2Y \times 2Y & 0 \\ 0 & 0 & 0 \end{bmatrix}$$

$$= Y\begin{bmatrix} 1 & -1 & 0 \\ -1 & 1 & 0 \\ 0 & 0 & 0 \end{bmatrix}$$

The value *Y* is the fault admittance in the faulted phases. Since the fault does not involve ground $Y_{gf} = 0$.

The symmetrical component fault admittance matrix may be substituted in (4) to obtain a simplified value of I_{fsj} to give:

$$I_{fsj} = \frac{V_j^0}{\frac{1}{Y} + Z_{sjj+} + Z_{sjj-}} \begin{bmatrix} 1 \\ -1 \\ 0 \end{bmatrix}, \qquad (11)$$

in which V_j^0 is the prefault voltage on bus bar *j*. The simplified formulation in (11), for the line-to-line fault, is useful for checking the accuracy of the symmetrical component currents in the fault when the general form is used. The impedances required to simulate the line-to-line fault in general terms are the impedances in the faulted phases. In the current work, various fault impedances were considered namely: purely resistive, resistive and inductive and purely inductive. The impedances in the faulted phases are assumed equal. In practice, this is not significant as the two values are added to arrive at the total impedance between the phases.

4. Computation of the Line-to-Line Fault

Equations (1) to (11) formed the basis of a computer program to solve unbalanced faults for a general power system using the fault admittance matrix method. The program is then applied on a simple power system comprising of three bus bars to solve for a line-to-line fault. A simple system is chosen because it is easy to check the results against the theoretical values that may be obtained by hand calculations. Once the program is validated on a simple system then it can be used on large systems and ultimately on practical systems with confidence.

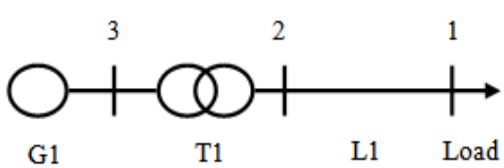

Figure 2: Sample Three Bus Bar

4.1 Sample System

Figure 2 shows a simple three bus bar power system with one generator, one transformer and one transmission line. The system if configured based on the simple power system that Saadat uses [5].

The power system per unit data is given in Table 1, where the subscripts *1*, *2*, and *0* refer to the positive, negative and zero sequence values respectively. The neutral point of the generator is grounded through a zero impedance.

Table 1: Power System Data

Item	S_{base} (MVA)	V_{base} (kV)	X_1 (pu)	X_2 (pu)	X_0 (pu)
G_1	100	20	0.15	0.15	0.05
T_1	100	20/220	0.1	0.1	0.1
L_1	100	220	0.25	0.25	0.7125

The transformer windings are delta connected on the low voltage side and earthed-star connected on the high voltage side, with the neutral solidly grounded. The phase shift of the transformer is *30˚*, i.e. from the generator side to the line side. Figure 3 shows the transformer voltages for a Yd11 connection which has a *30˚* phase shift. The computer program incorporates an input program that calculates the sequence admittance and impedance matrices and then assembles the symmetrical component bus impedance matrix for the power system. The symmetrical component bus impedance incorporates all the sequences values and has *3n* rows and *3n* columns where *n* is the number of bus bars. In general, the mutual terms between sequence values are zero as a three-phase power system is, by design, balanced.

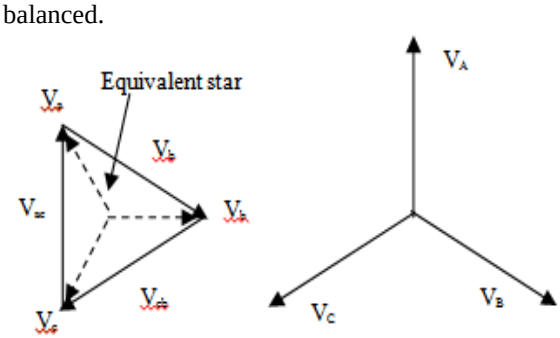

Figure 3: Delta-star Transformer Voltages for Yd11

The power system is assumed to be at no load before the occurrence of a fault. In practice the pre-fault conditions, established by a load flow study may be used. For developing a computer program the assumption of no load, and therefore voltages of *1.0* per unit at the bus bars and in the generator, is adequate.

he line to line fault is assumed to be at busbar *1*, the load busbar. Various impedances to simulate the line-to-line fault are considered: purely resistive, a resistive and inductive combination, and a purely inductive value. The line-to-line fault is described by the impedances in the respective faulted phases. In the general fault admittance method, the impedances to be input are those in the *b* and *c* phases. The open circuit values for the *a* phase and ground path are not input since their respective fault admittances are zero. The initial fault impedance values were of the order of 10^{-3} Ω. The sequence fault currents were calculated for the initial value. A second value of the fault impedances was used, obtained by multiplying the initial value by a factor of 10^{-1}. The second values of sequence fault currents were then calculated. The absolute value of the change in the positive sequence current was compared against a tolerance of 10^{-8}, and if smaller the solution was considered converged. If the absolute value of the change was larger than the tolerance, the fault impedance was again reduced and another value calculated. The iterative process was repeated until either convergence or non-convergence. Note that the order of the initial value of the fault impedances was much smaller than any of the components of the positive sequence impedances.
The presence of the delta earthed-star transformer poses a challenge in terms of its modelling. In the computer program, the transformer is modelled in one of two ways: as a normal star connection, for the positive and negative sequence networks or as a delta star transformer with a phase shift. In the former model, the phase shifts are incorporated when assembling the sequence currents to obtain the phase values. In particular on the delta connected side of the transformer the positive sequence currents' angles are increased by the phase shift while the angle of the negative sequence currents are reduced by the same value. The zero sequence currents, if any, are not affected by the phase shifts. Both models for the delta star transformer gave same results. (The $\sqrt{3}$ line current factor was used to find the line currents on the delta side of the delta star transformer).

5. Results and Discussions

5.1 Fault Simulation Impedances

The Thevenin's self-sequence impedances of the network seen from the faulted bus bar are:

$$\begin{bmatrix} j0.5 & 0 & 0 \\ 0 & j0.5 & 0 \\ 0 & 0 & j0.8125 \end{bmatrix}$$

In the classical solution the sequence currents due to a line-to-line fault are equal but of opposite sign and are found by inverting the sum of the positive and negative sequence elements. Thus the sequence (positive, negative and zero) currents due to a line-to-line fault at the faulted bus bar are, Where I_+ is the positive sequence current:

$$\begin{bmatrix} 1 \\ -1 \\ 0 \end{bmatrix}$$

In the general fault admittance method the values of fault impedances that give accurate values of sequence currents are given in Table 2. Case 1 in the table is for a resistive fault, case 2 is for a resistive and inductive fault while case 3 is for an inductive fault. The resistive fault impedance gives a better convergence, since the current tolerance is met by relatively high fault impedance, than for the other two cases.

Table 2: Solution Convergence Characteristics

Fault impedance			Current tolerance	Current difference
Case	Phase *a*	Ground path		
1 (r+j0)	5×10^{-7}	5×10^{-7}	1×10^{-8}	1.1×10^{-10}
2 (r+jx)	$(5+j5)10^{-9}$	$(5+j5)10^{-9}$	1×10^{-6}	1.4×10^{-7}
3 (0+jx)	$j5\times10^{-9}$	$j5\times10^{-9}$	1×10^{-6}	1.4×10^{-7}

There is a limit as to how low the fault impedance should be. When the value becomes too low the matrix $\left(U + Z_{sjj}Y_{fs}\right)^{-1}$ in (6) may not compute, and the solution for the symmetrical component currents may break down. Before solution breakdown, the values of the symmetrical component currents become inaccurate, depending on how much of the effect of the unity matrix in the equation is lost.

The computation results for a purely resistive fault impedance for a total fault impedance of 10^{-9} Ω, are listed in Table 3.

5.2 Simulation Results

The simulation results for purely resistive fault impedance for total fault impedance of 10^{-9} Ω, are shown in Table 3. A summary of the transformer phase currents is given in Figure 4.

5.3 Fault Admittance Matrix and Sequence Impedances at the Faulted Busbar.

The symmetrical component fault admittance matrix obtained from the program for the line to ground is in agreement with the theoretical value, obtained using (5). The self-sequence impedances at the faulted bus bar obtained from the program are equal to the theoretical values.

5.4 Fault Currents

The symmetrical component fault currents obtained from the program using (4) and (11) are in agreement with the theoretical values. In particular, the sequence currents for the line-to-line fault are equal and opposite to each other. This is consistent with the classical approach that connects the positive and negative sequence networks in parallel. For purposes of finding the sequence currents, the two networks may be considered to be in series opposition.The phase currents in the fault obtained from the program are in agreement with the theoretical values. In particular, the current in the healthy phase is zero and the currents in the faulted phases are equal and of opposite sign. The current in the fault is flowing from phase b to phase c and it is in anti-phase with the phase a voltage, since there is no resistance in the lines. The phase currents in the transmission line are equal to the currents in the fault. Note that the current at the receiving end of the line is by convention considered as flowing into the line, rather than out of it. Figure 4 shows the transformer phase currents. The currents on the line side are equal to the currents in the line, after allowing for the sign change due to convention. Note that the fault currents only flow in the windings of the faulted phases on the earthed-star connected side. The currents at the sending end of the transformer, the delta connected side, flow into the phase *a* and phase *c* terminals of the transformer, and return through the phase *b* terminal. However, the current in the phase *a* winding is zero, which is consistent with the ampere-turn balance requirement, as there is no current in the phase a winding on the earthed star connected side. The phase fault currents flowing from the generator are equal to the phase currents into the transformer. Phase fault currents flow out in phases *a* and *c* of the generator, and return in phase *b*. It is a feature of the delta earthed-star connection that a line-to-line load on the star side results in currents in all three phases on the delta side of the transformer, although the windings on the unloaded phase do not carry any currents.

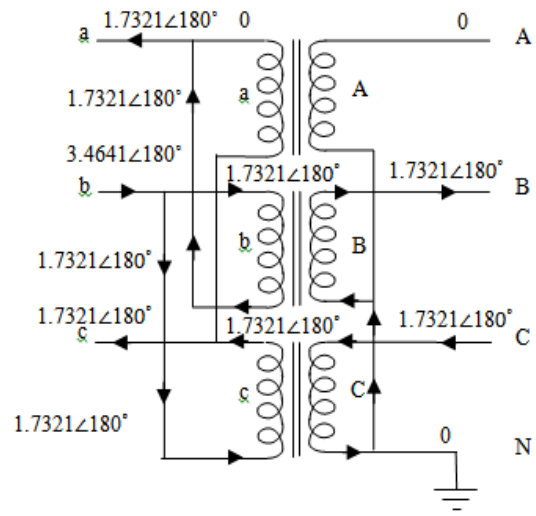

Figure 4: Transformer Currents for a Line-to-Line Fault

5.5 Fault Voltages

The symmetrical component voltages at the fault point obtained from the program using (9) are in agreement with the theoretical values. In particular, the positive and negative sequence voltages for a line-to-line fault are equal, consistent with the concept of the networks being connected in parallel. The zero sequence voltage is zero as the network is not connected.

The phase voltage of the healthy phase is *100%* of the prefault value at the fault, while the voltages at the fault point in the faulted phases are equal to half of the prefault value. The phase voltage magnitudes in the faulted phases at bus bar *2* are *66%* of the prefault value while the voltages in the healthy phase is unchanged at *100%* of the prefault value. At bus bar *3*, the phase voltages lead the phase voltages at bus bar *2* by *22°*, *49°* and *18°* in the *a*, *b* and *c* phases respectively. The magnitudes of the voltages in the *a* and *c* phases are equal to *93.4%* of the prefault value while that of the b phase is *70%* of the prefault value.

Table 3: Unbalanced Fault Study Results

General Fault Admittance Method - Delta Star Transformer Model

Number of busbars = 3
Number of transmission lines = 1
Number of transformers = 1
Number of generators = 1
Faulted busbar = 1
Fault type = 2

Line to Line Fault
Phase b resistance = 5.0000e-010
Phase b reactance = 0.0000e+000
Phase c resistance = 5.0000e-010
Phase c reactance = 0.0000e+000

Fault Admittance Matrix
Real and imaginary parts of Fault Admittance Matrix

1.0000e+009 +j 0.0000e+000	-1.0000e+009 +j 0.0000e+000	0.0000e+000 +j 0.0000e+000
-1.0000e+009 +j 0.0000e+000	1.0000e+009 +j 0.0000e+000	0.0000e+000 +j 0.0000e+000
0.0000e+000 +j 0.0000e+000	0.0000e+000 +j 0.0000e+000	0.0000e+000 +j 0.0000e+000

Thevenin's Symmetrical Component Impedance Matrix of Faulted Busbar
Real and imaginary parts of Symmetrical Component Impedance Matrix

0.0000 +j 0.5000	0.0000 +j 0.0000	0.0000 +j 0.0000
0.0000 +j 0.0000	0.0000 +j 0.5000	0.0000 +j 0.0000
0.0000 +j 0.0000	0.0000 +j 0.0000	0.0000 +j 0.8125

Fault Current in Symmetrical Components
Real and Imaginary Parts

	Simplified Method	General Method
+ve	0.0000 +j -1.0000	0.0000 +j -1.0000
-ve	-0.0000 +j 1.0000	0.0000 +j 1.0000
zero	0.0000 +j 0.0000	0.0000 +j 0.0000

Magnitude and Angle

	Simplified Method		General Method	
	Real	Imag	Magn	Angle
+ve	1.0000	-90.0000	1.0000	-90.0000
-ve	1.0000	90.0000	1.0000	90.0000
zero	0.0000	90.0000	0.0000	90.0000

Fault Current in Phase Components (in Rectangular and Polar Coordinates)

	Real	Imag	Magn	Angle
Phase a	0.0000	+j 0.0000	0.0000	0.0000
Phase b	-1.7321	+j 0.0000	1.7321	180.0000
Phase c	1.7321	+j 0.0000	1.7321	0.0000

Symmetrical Component Voltages at Faulted Busbar (in Rectangular and Polar Coordinates)

	Real	Imag	Magn	Angle
+ve	0.5000	0.0000	0.5000	0.0000
-ve	0.5000	-0.0000	0.5000	-0.0000
zero	0.0000	0.0000	0.0000	0.0000

Phase Voltages at Faulted Busbar

	Real	Imag	Magn	Angle
Phase a	1.0000	0.0000	1.0000	0.0000
Phase b	-0.5000	-0.0000	0.5000	180.0000
Phase c	-0.5000	0.0000	0.5000	180.0000

Postfault Voltages at Busbar Number = 1

Phase a	1.0000	0.0000	1.0000	0.0000
Phase b	-0.5000	-0.0000	0.5000	180.0000
Phase c	-0.5000	0.0000	0.5000	180.0000

Postfault Voltages at Busbar Number = 2

Phase a	1.0000	0.0000	1.0000	0.0000
Phase b	-0.5000	-0.4330	0.6614	220.8934
Phase c	-0.5000	0.4330	0.6614	139.1066

Postfault Voltages at Busbar Number = 3

Phase a	0.8660	0.3500	0.9341	22.0059
Phase b	-0.0000	-0.7000	0.7000	270.0000
Phase c	-0.8660	0.3500	0.9341	157.9941

Postfault Currents in Lines

			Phase *a*		Phase *b*		Phase *c*	
Line No.	SE Bus	RE Bus	Current Magn	Current Angle Deg.	Current Magn	Current Angle Deg.	Current Magn	Current Angle Deg.
1	2	1	0.0000	-90.0000	1.7321	180.0000	1.7321	0.0000
1	1	2	0.0000	90.0000	1.7321	-0.0000	1.7321	180.0000

Postfault Currents in Transformers

			Phase *a*		Phase *b*		Phase *c*	
Line No.	SE Bus	RE Bus	Current Magn	Current Angle Deg.	Current Magn	Current Angle Deg.	Current Magn	Current Angle Deg.
1	3	2	1.7321	0.0000	3.4641	180.0000	1.7321	-0.0000
1	2	3	0.0000	120.0000	1.7321	-0.0000	1.7321	180.0000

Postfault Currents in Generators

			Phase *a*		Phase *b*		Phase *c*	
Gen No.	SE Bus	RE Bus	Current Magn	Current Angle Deg.	Current Magn	Current Angle Deg.	Current Magn	Current Angle Deg.
1	4	3	1.7321	-0.0000	3.4641	180.0000	1.7321	-0.0000

6. Conclusions

A procedure for simulating the fault impedance of a metallic line-to-line fault has been proposed and tested. The results show that a purely resistive fault impedance gives the best convergence. For the system studied, a value of 10^{-9} Ω is suitable. The method allows estimated fault impedances to be reduced until convergence to a preset tolerance is reached. In cases where convergence is not as good as for purely resistive fault impedances the tolerance is reduced and the procedure repeated until convergence is obtained. The line-to-line fault is interesting for studying the delta earthed star transformer arrangement. It is seen that although only two phases carry the fault currents on the earthed star side the currents on the supply to the delta-connected side are in the three phases. However, there is no current in the two windings of the healthy phase. The results also show phase shifts in the transformer. The results give an insight in the effect that a delta earthed star transformer has on a power system during line-to-line faults. The main advantage of the general fault admittance method is that the user is not required to know beforehand how the sequence networks should be connected at the fault point in order to obtain the sequence currents and voltages. The user can deduce the various relationships from the results. The method is therefore easier to use and teach than the classical approach in which each network is solved in isolation and then the results combined to obtain the phase quantities. The line-to-line fault is interesting for studying the delta earthed star transformer arrangement. It is seen that although only two phases carry the fault currents on the earthed star side the currents on the supply to the delta-connected side are in the three phases. However, there is no current in

the two windings of the healthy phase. The results also show phase shifts in the transformer. The results give an insight in the effect that a delta earthed star transformer has on a power system during line-to-line faults. The main advantage of the general fault admittance method is that the user is not required to know beforehand how the sequence networks should be connected at the fault point in order to obtain the sequence currents and voltages. The user can deduce the various relationships from the results. The method is therefore easier to use and teach than the classical approach in which each network is solved in isolation and then the results combined to obtain the phase quantities.

References

[1] Sakala J.D., Daka J.S.J., General Fault Admittance Method Solution of a Line-to-Line-to-Ground Fault, Australian Journal of Basic and Applies Sciences, Vol. 7, No. 10, pp 78-85, Australia, August 2013.

[2] Sakala J.D., Daka J.S.J., General Fault Admittance Method Line-to-Ground Fault in Reference and Odd Phases, International Journal of Applied Science and Technology, Vol. 2, No. 9, pp 90-104, New York, USA, November 2012.

[3] Sakala J.D., Daka J.S.J., Unbalanced Fault Analysis by the General Fault Admittance Method, Proceedings of the 10th Botswana Institution of Engineers International Biennial Conference, Gaborone, Botswana, 17-19 October 2007.

[4] Elgerd, O.I., Electric Energy Systems Theory, an Introduction, McGraw Hill Inc., pp 430-476, 1971.

[5] Saadat, H. Power System Analysis, second edition, McGraw Hill, International Edition, pp 353-459, 2004.

[6] Das, J.C., Power System Analysis, Short circuit load flow and harmonics, Marcel Dekker Inc., pp 1-71, 2002.

[7] El-Hawary, M., Electrical Power Systems Design and Analysis, IEEE Press Power Systems Engineering Series, pp 469-540, 1995.

[8] Zhu, J., Analysis of Transmission System Faults in the Phase Domain, MSc. Thesis, Texas A&M University, August 2004.

[9] Anderson, P.M., Analysis of Faulted Power Systems, IEEE Press, 1995.

Japhet D. Sakala is a Senior Lecturer in Electrical Power Systems at the University of Botswana, Gaborone, Botswana. Since 2005, he has taught in the Department of Electrical Engineering. From 1982 to 1992, the author was Lecturer I at the University of Zambia. He held various corporate management positions at Zambia Electricity Supply Corporation Limited from 1992 to 1998. He also served as Commercial Manager at the Botswana Power Corporation from 1999 to 2004. He specializes in electrical power systems engineering. He has a PhD. (1982) and MSc. (1978) in Electrical Power Systems Analysis and Control from the University of Manchester Institute of Science and Technology, U.K., and a BEng. in Electrical Machines and Power Systems from the University of Zambia, Zambia, in 1975. His current research interests include Power Systems Design and Simulation, and Electrical Power Systems Demand Side Management.

James S.J. Daka is an Associate Professor in Telecommunications Engineering at the University of Botswana, Gaborone, Botswana. Since 1993, he has taught in the Department of Electrical Engineering. From 1983 to 1993, the author was Lecturer II at the University of Zambia. He specializes in Electronic Systems Engineering and Telecommunications Engineering. He has a PhD. in Electronic Systems Engineering from University of Essex, U.K., in 1989, an MSc. in Digital Communications Systems from Loughborough University of Technology, U.K., in 1983, and a BEng. in Electronics and Telecommunications Engineering from the University of Zambia, Zambia, in 1981. His current research interests include Data Communications, Broadcast file Distribution Protocols, Microcontroller Based Applications, and Optical Fibre and Broadband Communications.